andis®

MODEL D-4D CORDLESS TRIMMER 230/240 VOLT

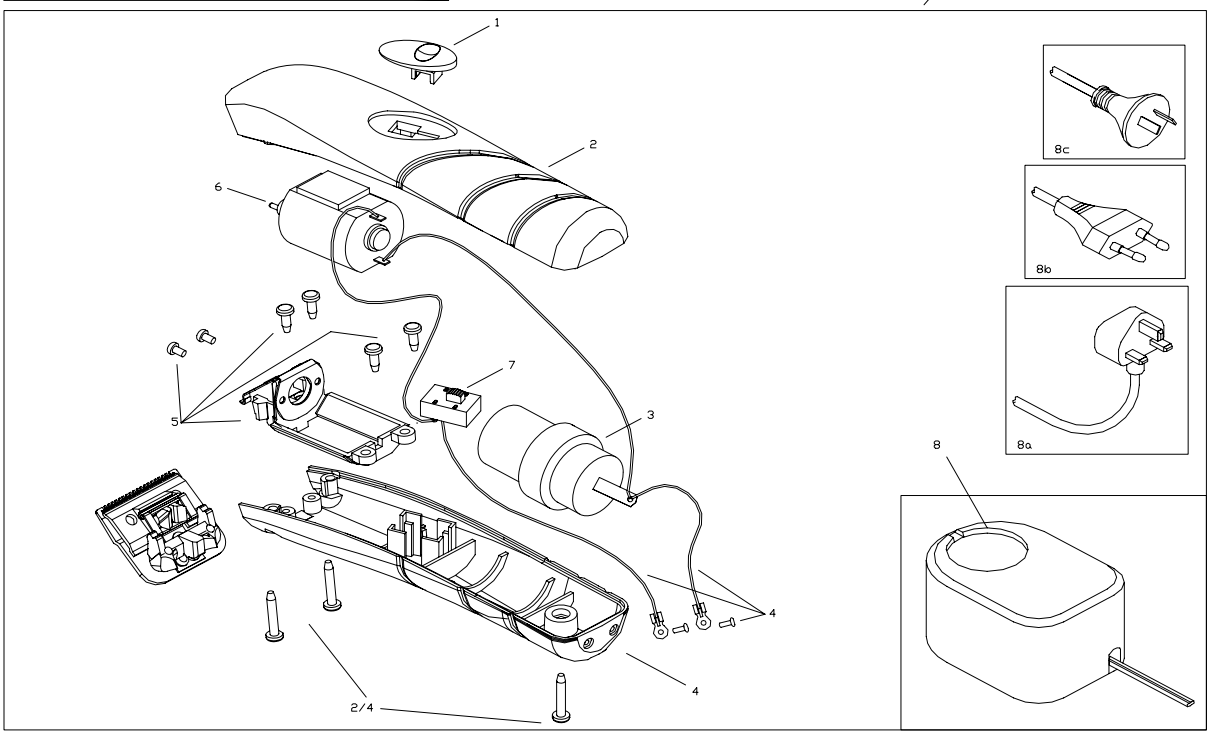

ITEM NO.	PART NO.	DESCRIPTION	QTY. REQ'D
1	69004	Switch Actuator	1
2	69022	Upper Housing Assembly-Chrome	1
		(Includes Upper housing and screws	
		(qty 3)	
3	69024	Battery Assy.	1
		(Includes battery and foam pad)	
4		Lower Housing Assembly	
		(Includes lower housing, Neg and Pos	
		wires, Rivet (2), and housing screws	
		(3))	
4a	69026	Lwr. Hsg. Assy. w/o pad print	1
5	69041	Motor Mount Assembly	1
		(Includes motor mount, spring clip,	
		motor mount screws (qty 4) and motor	
		screws (qty 2))	
6	69028	Motor Assembly	1
		(Includes motor, cam, and black	
		rubber pads (qty 2))	
7	29950	Switch	1
8		Adapter	
8a	32770	Charger (BS)	1
8b	32775	Charger (CE)	1

ITEM NO.	PART NO.	DESCRIPTION	QTY. REQ'D
8c	32780	Charger (SAA)	1

IMPORTANT INFORMATION

When ordering repair parts, include part number, part name and model of trimmer. For best performance, trimmer blades should be CLEANED and OILED with Andis Clipper Oil before and after use, If repair is necessary, return to any Andis Authorized Repair Service Station, or to Andis Company, 1800 Renaissance Blvd., Sturtevant, Wisconsin, 53177 U.S.A.. Pack carefully, mail either Insured Parcel Post, or U.P.S. , attach a letter to outside of package explaining difficulty.

Rev-A 4-24-06